KIT NO. 9007656

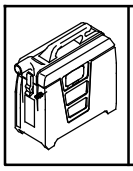

Filter Replacement Kit

Models: 1000, 3500, EX-SPOT-8, V-WD-57 (240V EMC)

NOTICE: The original filter, (p/n 613097), was discontinued and replaced by this kit. Install kit as illustrated below.

FOR SAFETY: Before installing kit, disconnect power cord from electrical outlet.

Models: 1000, EX-SPOT-8 Extractor

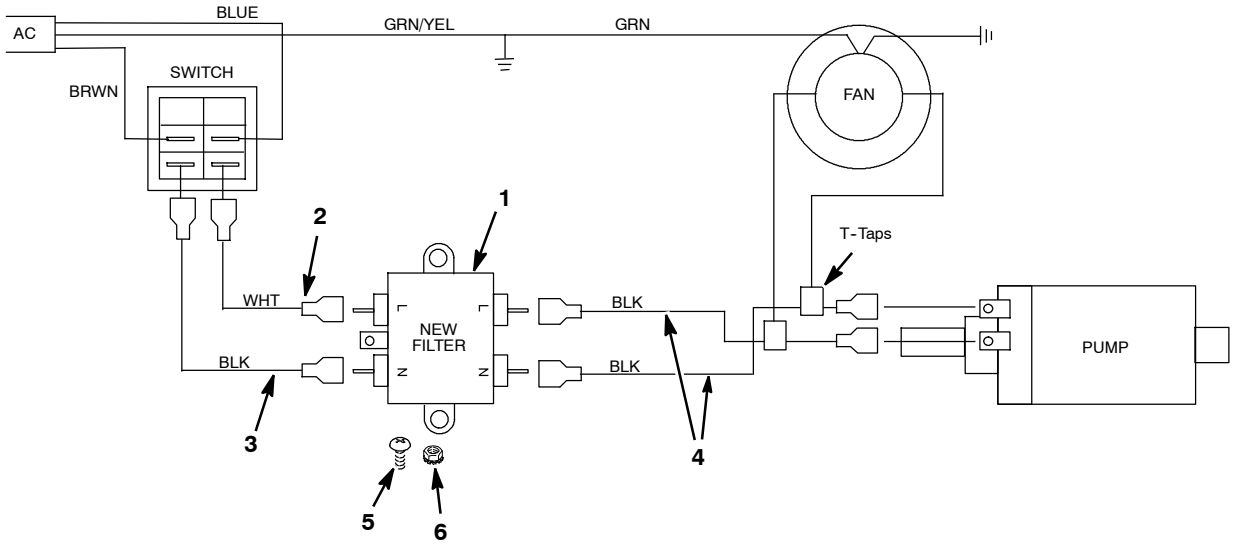

Models: 3500, V-WD-57 Wet/Dry Vacuum

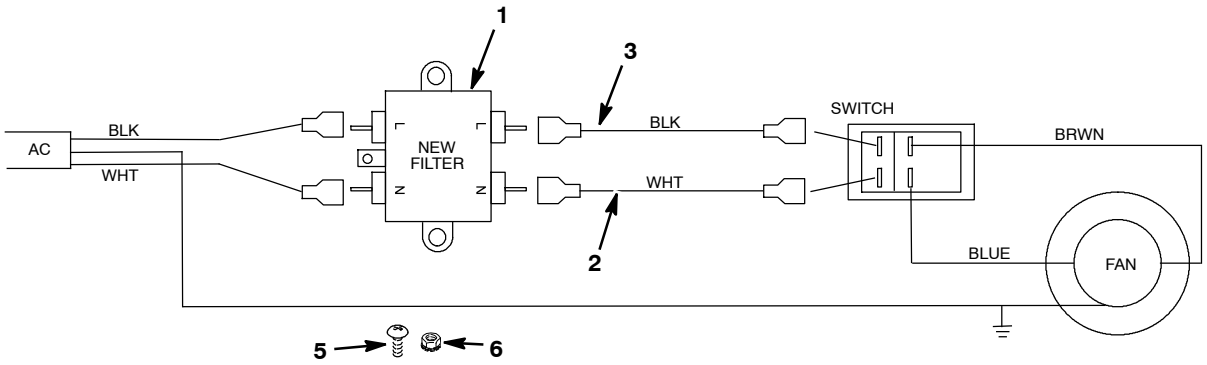

Kit Contents

REF	PART #	DESCRIPTION	QTY.
1	1061494	FILTER, NOISE	1
2	603953	WIRE, 18GA 08.0L WHITE .25QF / .25QF	1
3	603952	WIRE, 18GA 08.0L BLK .25QF / .25QF	1
4	700666	WIRE, 18GA 16.0L BLK .25QF / .25QF, TT	2
5	140890	SCREW, TRS, PHL, 10-24 X 0.50, SS	1
6	140552	NUT, HEX, LOCK, #10-24, NL, SS	1

Please keep this sheet with your owner's manual for future reference.